RevNo	Revision note	Date	Signature	Checked

MODEL

Solts	12T
Turret servo motor type	JSMA-PMB15A5A
Turret servo motor power	1.5kw
Turret servo motor speed	2000rpm
Gear speed ratio (motor/turnery)	1:24
One step index time	0.15
Unclamping or clamping time	0.15
Coupling type	3 piece type <24T>
Repeatability accuracy	±2''

Mark Instructions

NO.	Instructions	specifications	Note	
A	Coupling On	PT1/8''	25bar/50cc	
B	Coupling Off	PT1/8''	25bar/50cc	
C	Cutting fluid in	PT3/8''	>10bar	
D	Oil level	PF3/8''		
E	Vent hole	M12*P1.5		
F	Oil filler	M12*P1.5		
G	Cutting fluid out	PT1/8''		
H	suspension ring	4-M12*P1.75	suspension ring*2	
K	Sheet fix hole	22-M6*P1.0		
M	Coupling On sencer	M8*P1.0	S1	PNP-NO
N	Coupling Off sencer	M8*P1.0	S2	PNP-NO
Q	Power signal line connector	Enclosure a receptacle		
R	Encoder signal line connector	Enclosure a receptacle		
S	Sencer signal line connector	Enclosure a receptacle		

*Sencer signal line connector Feedback signal connector pin 6Pin

S1
- 1 S1 BN Brown +10~30V DC
- 2 S1 BU Blue-
- 3 S1 BK Black S1 Signal<Coupling On sencer>

S2
- 4 S2 BN Brown +10~30V DC
- 5 S2 BU Blue-
- 6 S2 BK Black S1 Signal<Coupling Off sencer>

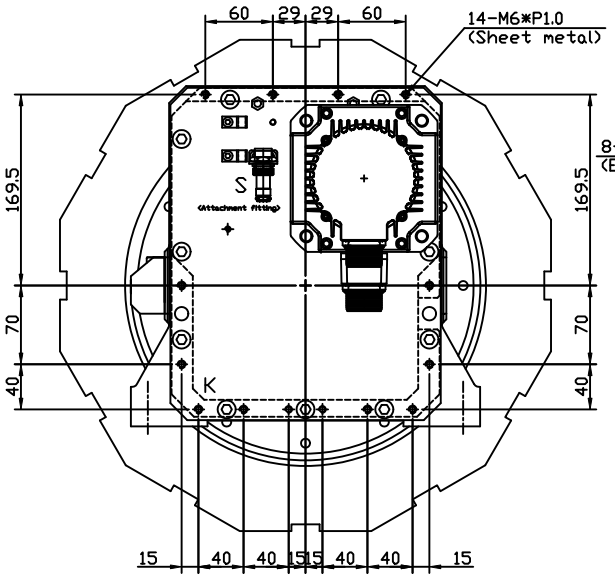

Back view

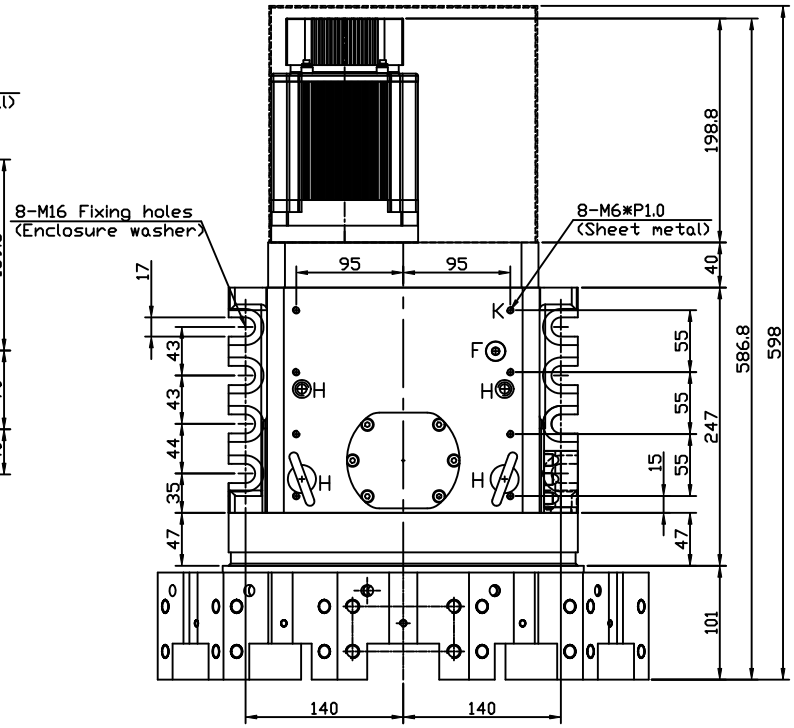

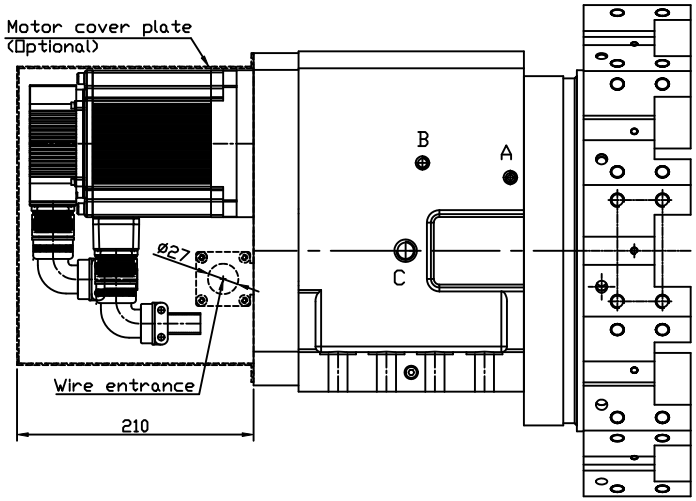

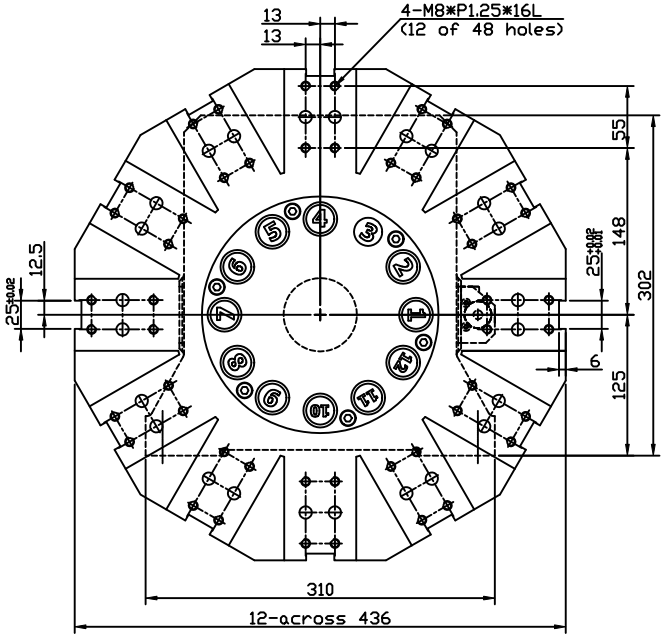

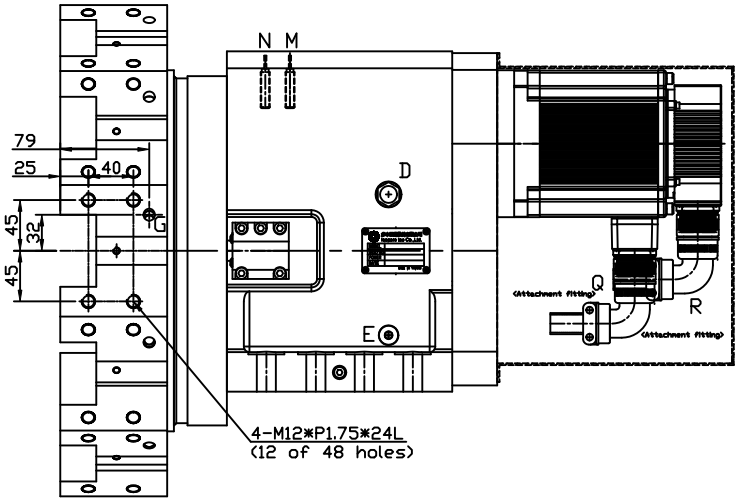

Itemref	Quantity	Title/Name, designation, material, dimension etc	Article No./Reference
Designed by	Checked by	Approved by - date	Filename	Date	Scale

多本機電股份有限公司
loopers tec Co.,Ltd.

Name	ST-A250R Hydraulic Servo Turret-Slotted		
Number	S95.A25.32B.TR0	Edition	Sheet